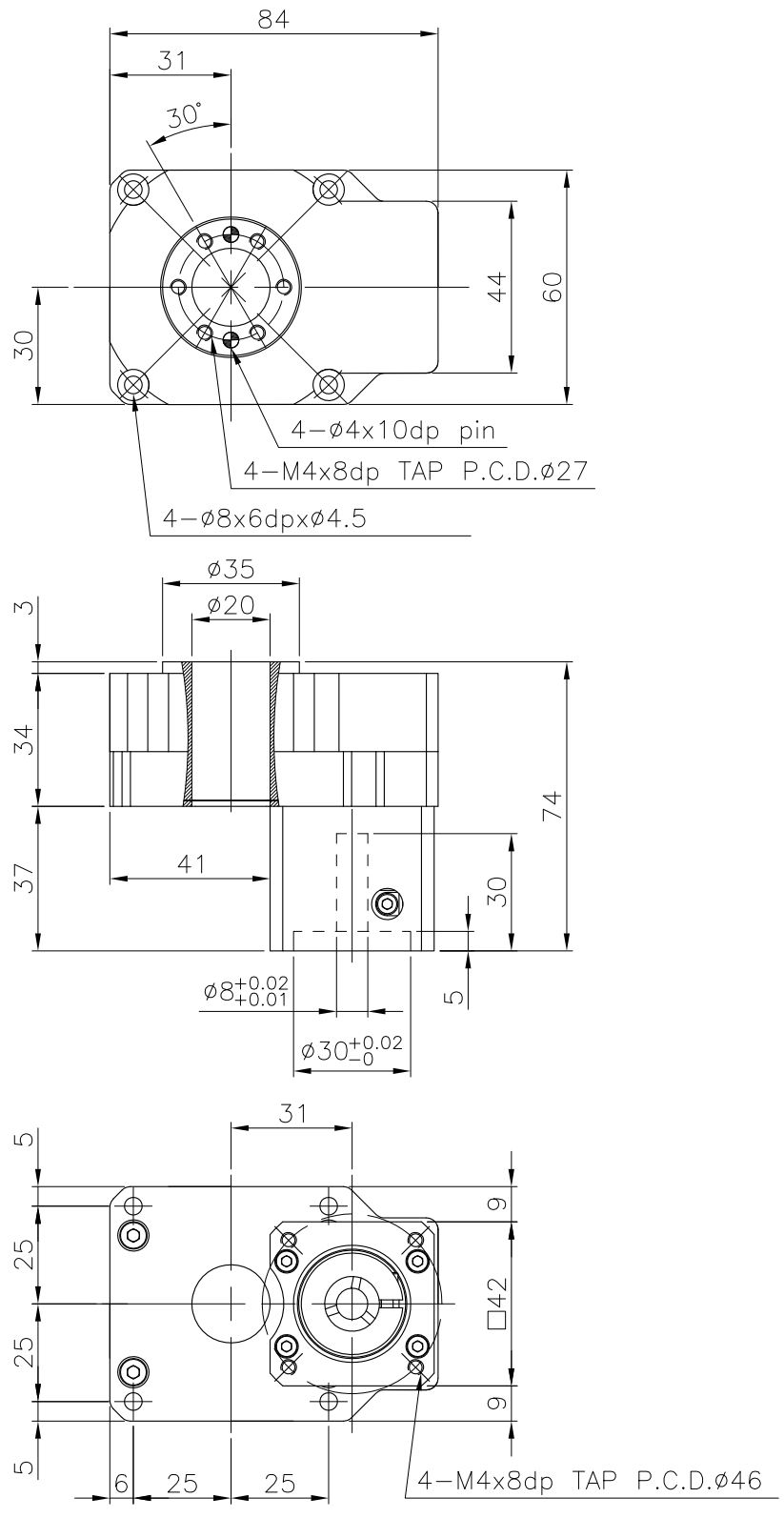
84
31
30°
44
60
30
4−ø4x10dp pin
4−M4x8dp TAP P.C.D.ø27
4−ø8x6dpxø4.5
ø35
ø20
3
34
37
41
74
30
5
ø8+0.02 +0.01
ø30+0.02 −0
31
5
25
25
9
□42
9
5
6
25
25
4−M4x8dp TAP P.C.D.ø46